Material:	Die-cast Zinc
Article number:	D1175 / reference C /colour

A	C	P	W
126	96	30	25
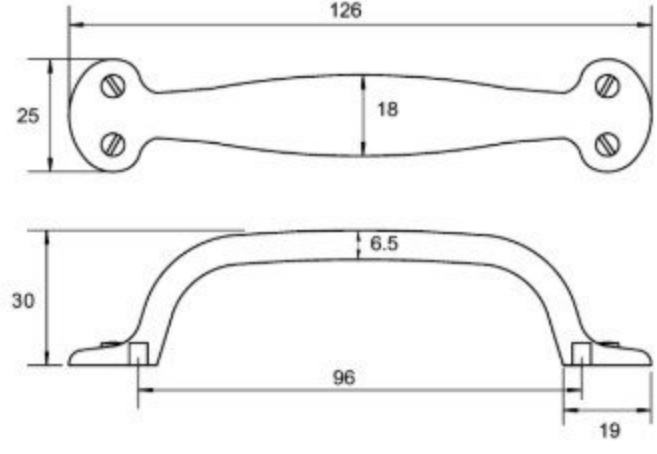
Colours available:	Antique Pewter (AP) Rustic Brass (RB) Matt Nickel (MN) Polished Chrome (PC) Satin Chrome (SAT)